BPSC/SPC

Features

Aesthetic design

Main material: ABS

Data Subject To Change Without Notice

Technical Specifications

Model	BPSC/SPC
Main material	ABS
Dimension(WxHxD)	69.8 x 67.9 x 174.0 mm
Weight	182.6g
Color	White
Operating Temperature	-30ºC ~ +60ºC
Humidity	< 95% RH
Waterproof grade	IP66
Optional Accessory	B310/B116 Junction Box

Dimensions (mm)

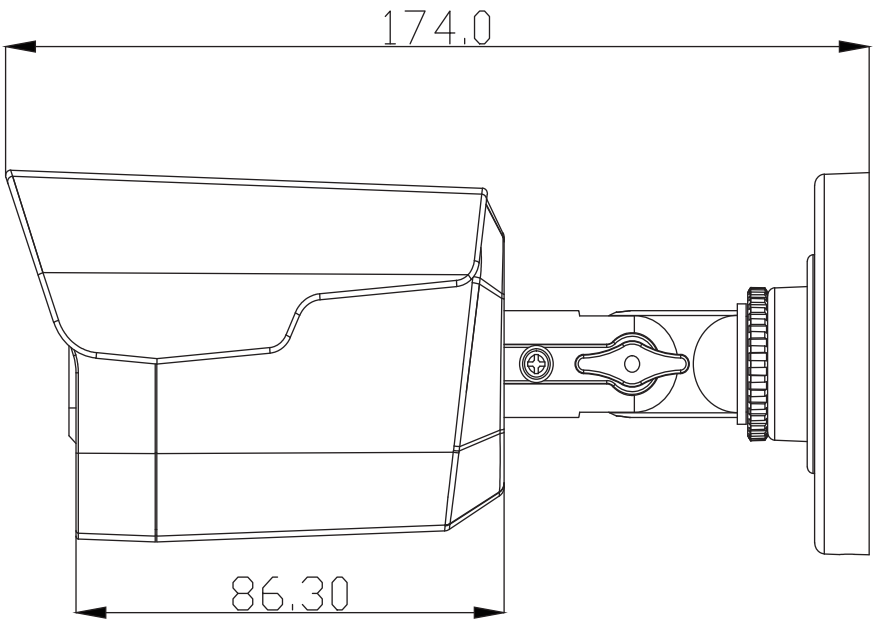

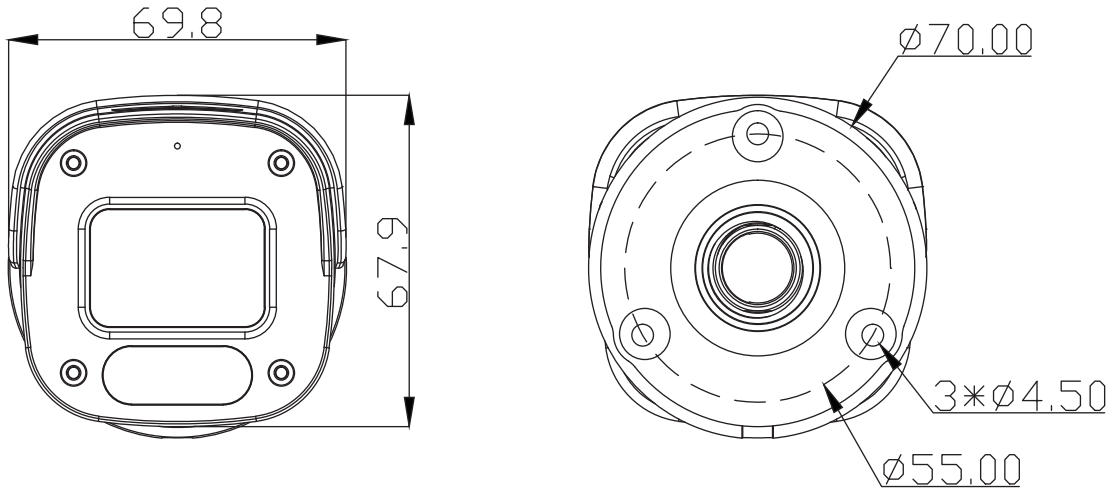

Packaging Information

Screw pack x 1 : (1) M3.5 x 25, 3pcs;(2) Plastic expansion pipe, 3pcs

Sticker x 1